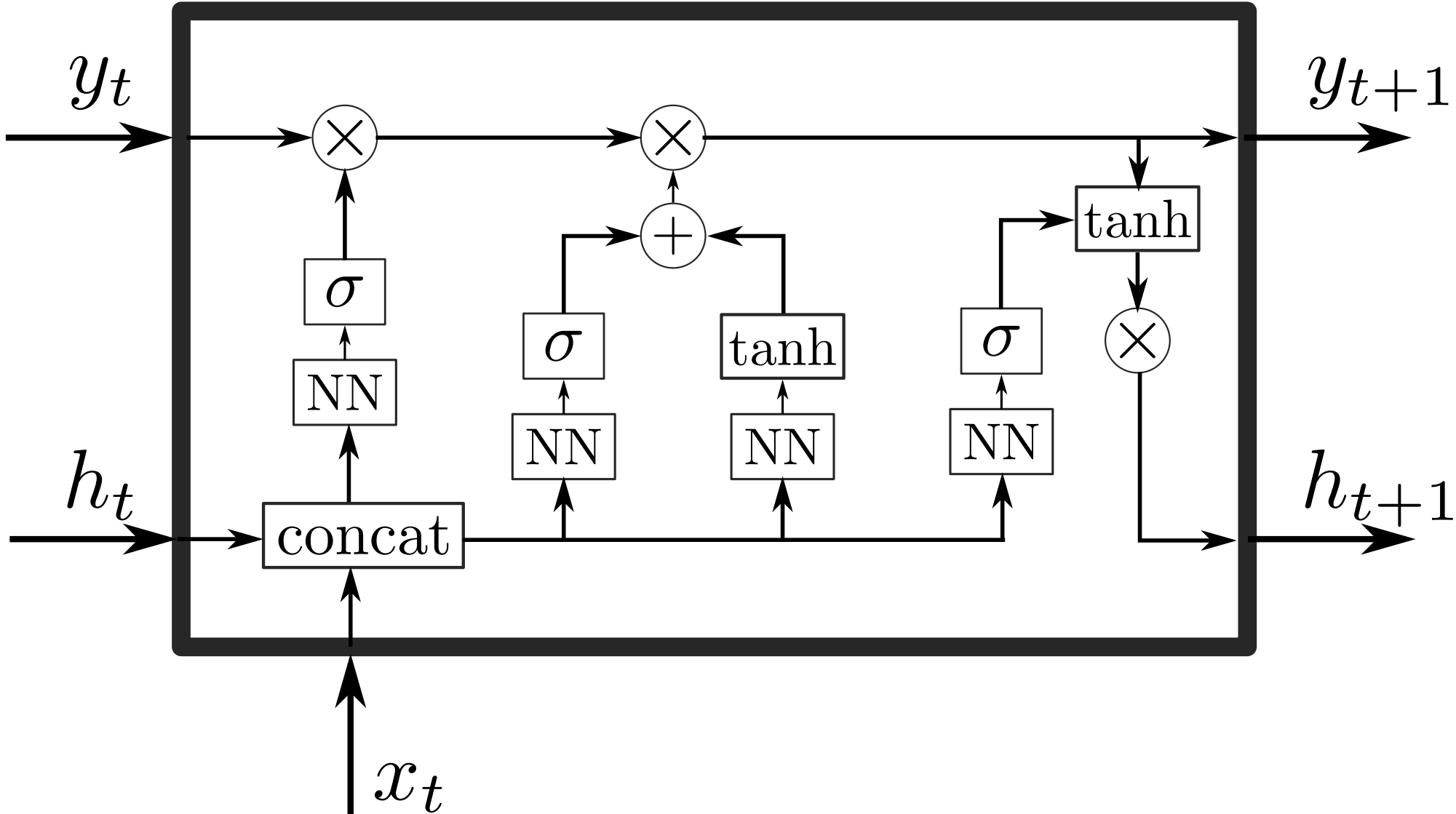
y_t
y_{t+1}
h_t
h_{t+1}
x_t
concat
NN
σ
NN
σ
NN
tanh
NN
σ
tanh