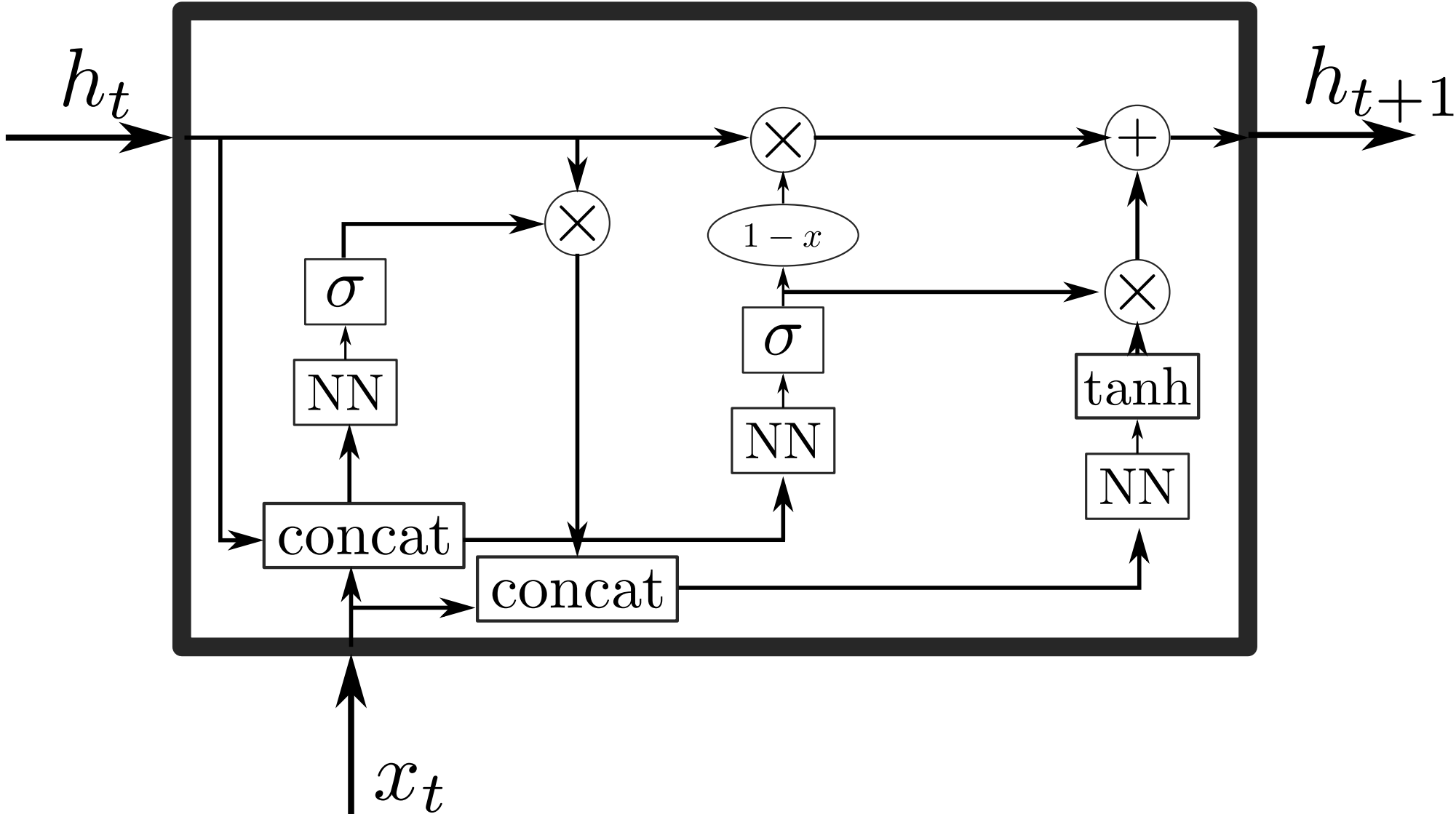
h_t
h_{t+1}
σ
NN
concat
σ
NN
concat
$1-x$
tanh
NN
x_t